$V = \int$ Area of cross-section of shape

21. Find the volume of the solid generated by revolving the region in the first quadrant bounded above by the line $y = \sqrt{2}$, below by the curve **y = secxtanx,** and on the left by the y -axis, about the line $y = \sqrt{2}$.

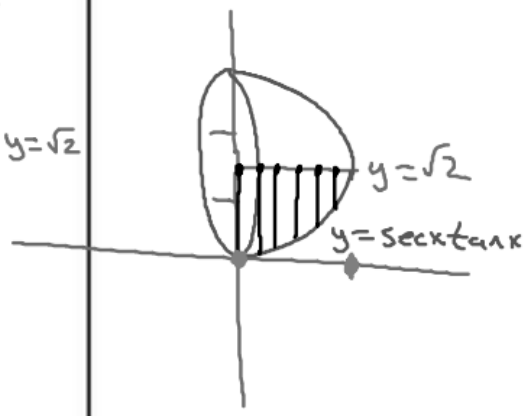

$$V = \pi \int r^2$$

$$V = \pi \int_0^{\pi/4} \left(\sqrt{2} - \sec x \tan x\right)^2$$

$x = \frac{y}{2}$

30a. Find the volume of the solid generated by revolving the triangular region bounded by the lines y = 2x, y = 0 about the line x = 1.

x-axis

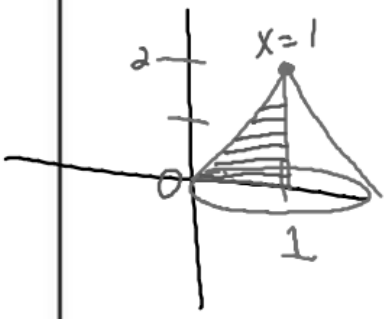

$$V = \pi \int r^2$$

$$V = \pi \int_0^2 \left(1 - \frac{y}{2}\right)^2$$

31b. Find the volume of the solid generated by revolving the triangular region bounded by the curve $y = x^2$ and the line y =1 about the line y = 2.

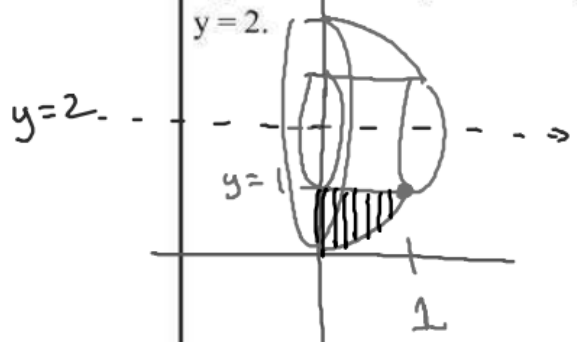

$V = \pi \int r^2$

$V = \pi \int_0^1 (2-x^2)^2$

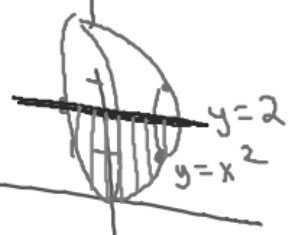

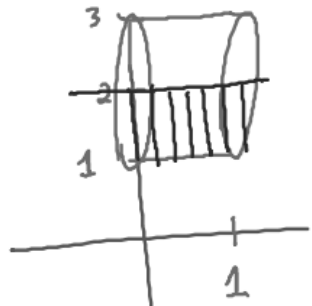

$V = \pi \int_0^1 (2-1)^2$

29d. Find the volume of the solid generated by revolving the triangular region bounded by the curve $y = \sqrt{x}$ and the lines y =2 and x = 0 about the line x = 4.

$x = y^2$ $\quad V = \pi \int_0^2 r^2$

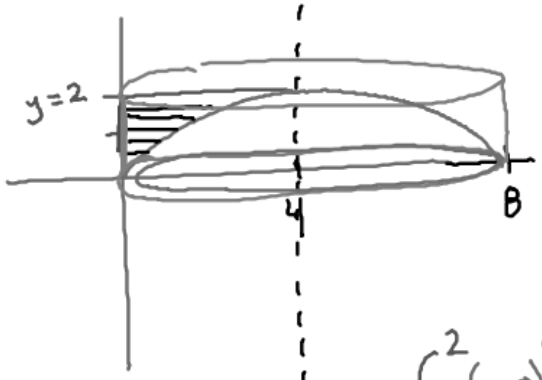

$V = \pi \int_0^2 (4-0)^2$

$V = \pi \int_0^2 (4-y^2)^2$

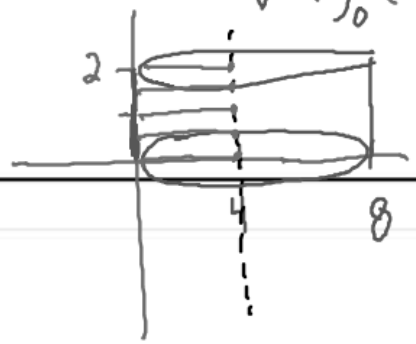

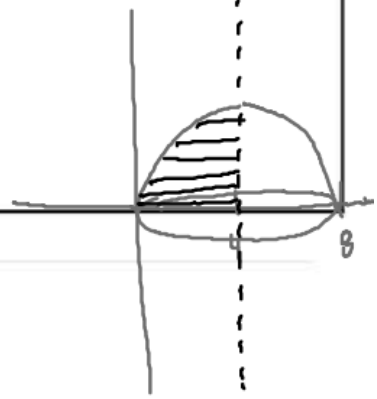

Rotate about the x-axis or a vertical line ($y=$)

* Solve equation for $y=$
* $\int_{x_1}^{x^2} (\qquad)^2 \, dx$

Rotate about the y-axis or a vertical line ($x=$

* Solve equation for $x=$
* $\int_{y_1}^{y_2} (\qquad)^2 \, dy$